User manual

MINI ALL IN ONE BALLISTICS
WIND & WEATHER STATION · **CMI1086**

English version

October 2026

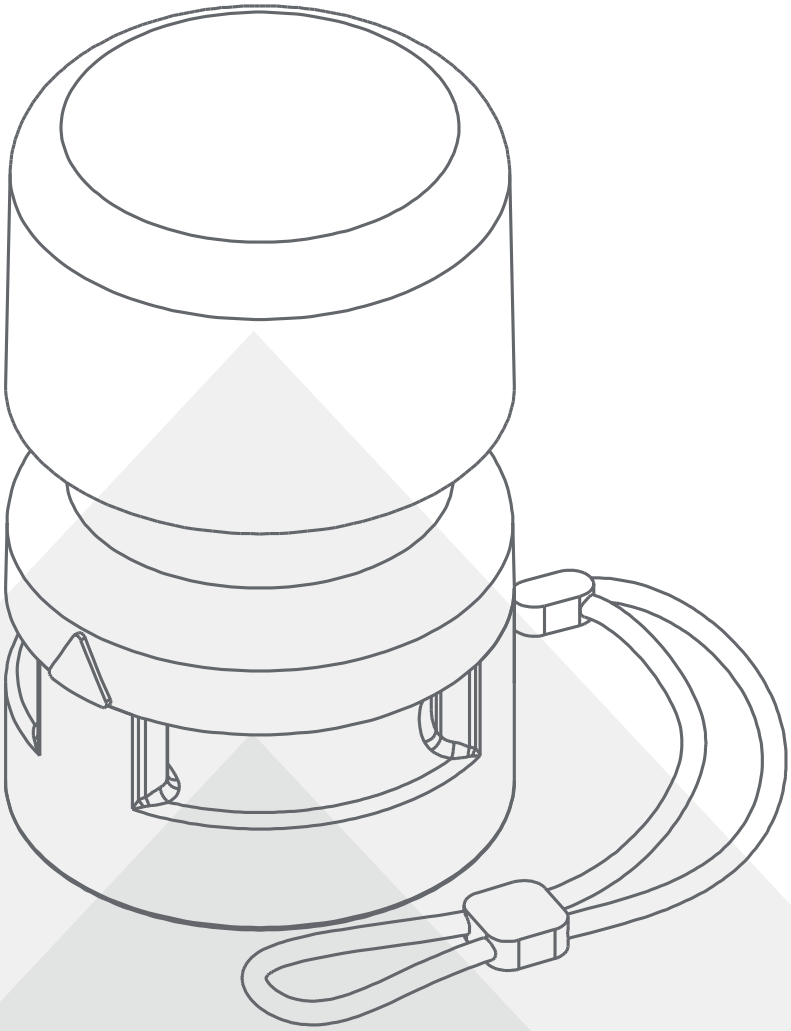

CALYPSO instruments

BALLISTICS METERS

usermanual_miniallinoneballistics_cmi1086_rev02

Index

1 Product Overview 3
2 Package Content 3
3 Technical Specifications 3
3.1 Weather data 3
3.2 Power consumption 4
3.3 Parameters 4
3.4 Data Output: Bluetooth and Firmware 4
3.5 Sensors 4
3.6 Dimensions 5
3.7 Materials 5
3.8 Mount 5
3.9 Environmental 5
3.10 Compatible Devices 5
3.11 Calibration 5
4 Functions 6
5 Installation 6
5.1 Installing the Unit 6
5.2 How to Use 6
6 Troubleshooting 8
6.1 Troubleshooting Battery 8
6.2 Troubleshooting Bluetooth Connection 8
6.3 Troubleshooting Sensor Accuracy 8
7 Calypso Ballistics App 8
8 Configuration and Firmware Updates 9
9 Compatible Apps 9
10 Developers 9
11 General Information 9
11.1 General Recommendations 9
11.2 Maintenance and Repair 9
11.3 Warranty 10

1 Product Overview

The new Calypso Instruments device Ultrasonic Portable Mini All-in-One Ballistics combines ultrasonic wind measurement with temperature, humidity and atmospheric pressure in one compact unit. Precision weather station in the palm of your hand.

2 Package Content

The package contains the following:

- Ultrasonic Portable Mini All-in-One Ballistics instrument.
- Wireless charging QI.
- Travel pouch.
- Serial number on the packaging.
- A user guide at www.ballisticswindmeters.com with all useful information for the customer, linked via a QR code on the packaging.

NOTE
It is recommended to keep the box; it contains the serial number.

IMPORTANT NOTE
Before installing the anemometer, especially in challenging locations like the top of a mast, **please thoroughly test the device** to ensure it functions correctly without errors or issues.

We recommend testing the unit in an easily accessible location to confirm its accuracy. Always test it **outside of the packaging.**

3 Technical Specifications

The Ultrasonic Portable Mini All-in-One Ballistics has the following technical specifications:

3.1 Weather data

	WIND SPEED
Range	0.5 – 45 m/s (1.12 – 100 mph)
Accuracy	0.3 m/s or 3% at 0–16 m/s (0–35.8 mph) 5% at 16–45 m/s (35.8–100 mph)
Resolution	0.01 m/s (0.0224 mph)

	WIND DIRECTION
Range	0 – 359°
Accuracy	3° at 1–5 m/s (2.24–11.2 mph) 1° at 5–16 m/s (11.2–35.8 mph) 6° at 16–45 m/s (35.8–100 mph)
Resolution	1°

	TEMPERATURE
Range	−15 to 60 °C (5 to 140 °F)
Accuracy	±0.5 °C at 25 °C (±0.9 °F)
Resolution	0.01 °C (0.018 °F)

	HUMIDITY
Range	10 – 90%
Accuracy	±3.5%
Resolution	1%

	PRESSURE
Range	500 to 1200 hPa
Accuracy	±1 hPa
Resolution	0.1 hPa

3.2 Power consumption

Type	Battery-powered
Battery life (active use)	Up to 150 hours with full charge
Battery life (standby)	2,000 hours (advertising)
Charging	Wireless QI (charge upside down)
Charge time	~1 hour

NOTE
To check battery level, connect to the Calypso Ballistics App. The level is shown in the side menu.
Not recommended to use any other wireless charger than the one provided from the manufacturer.
We highly recommend to charge the unit before using it. Charge the device upside down. Charging should take around 1 hour. It is not recommended to leave the unit charging for extended periods.

3.3 Parameters

Sample rate	1 Hz

	Configurable units via Calypso Ballistics App
Wind	m/s, km/h, knots, mph
Temperature	Celsius, Fahrenheit or Kelvin
Humidity	Percentage (%)
Pressure	hPa, inHg, mmHg, kPa or atm

3.4 Data Output: Bluetooth and Firmware

	BLUETOOTH
Version	BLE 5.1 or beyond
Range	~30 m in open space (no interference)

	FIRMWARE
Upgrade	Via Bluetooth
Download	Calypso Ballistics App

The Ultrasonic Portable Mini All-in-One Ballistics incorporates Bluetooth Low Energy (BLE) technology, providing reduced power consumption while maintaining a similar communication range.

3.5 Sensors

Wind sensor	Ultrasonic transducers (4x)
Temperature, humidity and pressure sensor	SHT40, DPS368 & NTCLE350E4103

The device has been designed with no moving parts to maximise reliability and minimise maintenance. Transducers communicate in pairs using ultrasonic waves to calculate wind speed and direction.

3.6 Dimensions

Dimensions and weight make the Ultrasonic Portable Mini All-in-One Ballistics a compact and easy-to-use product.

Diameter	43 mm (1.69 in.)
Height	70 mm (2.76 in.)
Weight	85 g (3 oz.)

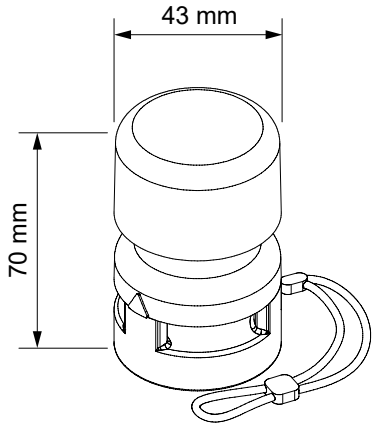

3.7 Materials

Main material	Injected engineering plastic (grey)

3.8 Mount

MOUNTING	
Thread	1/4" Female thread
Tripod thread	1/4" standard

ACCESSORIES	
Mast mount	CMI1028
Phone mount	CMI1023

A wide range of accessories can be used with the device, visit our website www.ballisticswindmeters.com and check all the accessories available and their possible combinations.

3.9 Environmental

IP Protection grade	IP66
Temperature range	−15 to 60 °C (5 to 140 °F)
Humidity range	10– 90% HR

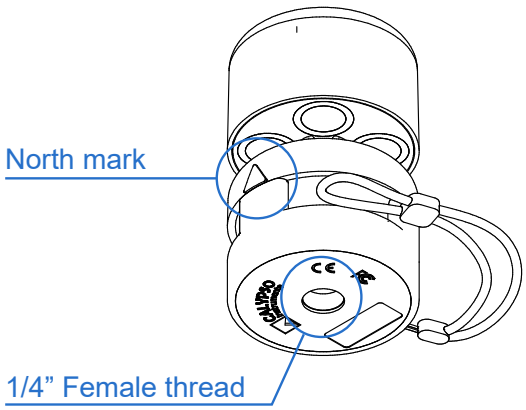

3.10 Compatible Devices

Android	Bluetooth 5.1 up to 6.0
iPhone	Bluetooth 5.1 up to 6.0
iPad	Bluetooth 5.1 up to 6.0

Visit www.ballisticswindmeters.com for the latest compatibility information.

3.11 Calibration

The Ultrasonic Portable Mini All-in-One Ballistics has been calibrated with accuracy following the same calibration standards for each unit.

4 Functions

The Ultrasonic Portable Mini All-in-One Ballistics will allow you to perform a great diversity of operations adapting to your needs.

It will provide you information about everything that is shown below through the application Calypso Ballistics App, but the most important aspects that facilitate the unit are the following:

- Apparent Wind and Apparent Wind Angle.
- Real Wind and Real Wind Angle – All collected by the anemometer and the crossing with the GPS of the connected device.
- Data logging – Collected data can be stored in the memory of the application, exported and shown on graphs.
- Temperature
- Humidity
- Pressure

> **NOTE**
> For full information on using the Calypso Ballistics App, visit www.ballisticswindmeters.com and download the latest app manual.

5 Installation

5.1 Installing the Unit

Orient the unit towards the north using the alignment mark on the side of the device. Install in a location free from any obstacles within a 2-metre radius that could disturb airflow to the transducers.

For accurate readings, never place any obstacles around the sensors. Ensure the space between the sensors and the base of the unit is clear — objects such as cords can interfere with ultrasonic waves and produce inaccurate wind readings.

5.2 How to Use

Step 1 — Remove the unit from the packaging

- Remove the device from its case and protective element and keep it out throughout the usage cycle.

> **NOTE**
> Keeping the device inside its packaging during setup and use will cause erroneous measurements.
> Always use it **outside of the packaging**

Step 2 — Charge the Ultrasonic device.

- Place the unit on the base of the wireless charger upside down (tripod screw and lanyard facing up).
- Charge for 1 hour until full.

  The following shows the usage sequence for the QI wireless charger:

1. Connect the QI charger to a power source
2. Place the Ultrasonic face down on the charging base.
3. The charger will begin charging and will display a rapid rainbow sequence for as long as the Ultrasonic remains on the charging base.
4. When the ultrasonic device is removed, the color sequence will slow down for a few seconds, indicating that the device has been removed.
5. After a few seconds the base returns to its standby state, with no active light.

NOTE
Allow the device to stabilize after charging. Using the unit immediately after charging may affect measurement accuracy. Wait a few minutes before use

Step 3— Install the Calypso Ballistics App and pair your device

- Make sure your device has Bluetooth enabled. Compatible with BLE 5.1 up to BLE 6.0.
- Download the Calypso Ballistics App from Google Play or the App Store.
- Open the App, slide right to open settings, and press Calypso, then Calypso Ultrasonic.
- All Ultrasonic Portable devices within range appear. If no device is shown, swipe down on “Scanning for wind device” screen.
- Select the one matching the MAC number on your box. If your device connects correctly, continue with the normal installation. If not, please go to section 6 Troubleshooting.

WARNING
Each unit can only be connected to one device at a time. Disconnect from the current device first to allow pairing with another.

Step 4 — If your device will be exposed to sunlight: Spin it.

- Spin the Ultrasonic Portable device by its lanyard in a full circle for 80 seconds to obtain accurate temperature, pressure and humidity readings.
- Always maintain a firm grip on the lanyard.

Step 5— Disconnect your device.

- To avoid draining the battery, unpair your device from the App. This will keep your unit off.

6 Troubleshooting

6.1 Troubleshooting Battery

If you don't see your device in the App:

- Make sure your Ultrasonic Portable unit is not in Off mode (unit off when battery is empty).
- There will be no battery level shown when trying to connect to the device in Calypso Ballistics App. Charge your device.

6.2 Troubleshooting Bluetooth Connection

If your compatible device cannot connect:

- Make sure Bluetooth mode is running on your smartphone, tablet or PC.
- Make sure no other device is already linked to your Ultrasonic Portable unit.
- Make sure you are within BLE range (~30 meters).

WARNING
Each unit can only be connected to one device at a time. Disconnect from the current device first to allow pairing with another.

6.3 Troubleshooting Sensor Accuracy

If data is inaccurate:

- Make sure the Ultrasonic device has been spun for 80 seconds.
- Make sure no debris is around or near the sensors.

You can review 11.1 General Recommendations.

If the problem persists, contact: sales@calypsoinstruments.com

7 Calypso Ballistics App

The Ultrasonic Portable unit you have purchased is designed to be used with the Calypso Ballistics App, which provides apparent and true wind speed and direction, as well as temperature, humidity and pressure data, and allows data logging for future viewing. The app offers a variety of interfaces suited to different use cases.

For more information, download the latest app manual from www.ballisticswindmeters.com

8 Configuration and Firmware Updates

Keeping your anemometer up to date is essential for ensuring optimal performance and accurate wind data collection.

Configuration and firmware updates run within the Calypso Ballistics App.

Stay up-to-date, get accurate data. Regular updates ensure your anemometer is running the latest firmware, improving both reliability and functionality.

> **WARNING**
> Before updating your device, check for a new version. There's no need to update if a new version isn't available.

For more information, download the latest version from www.ballisticswindmeters.com

9 Compatible Apps

We constantly work on making the product compatible with a great diversity of Applications.

To see compatible Apps visit the product tab in our website www.ballisticswindmeters.com

10 Developers

We welcome third-party software and hardware companies to integrate our products into their platforms.

For more information, please contact us through our web form or at sales@calypsoinstruments.com

11 General Information

11.1 General Recommendations

Install in an open location with a clear 2-metre radius, free from obstacles.

- Do not attempt to access the transducers area with your fingers.
- Do not attempt any modification to the unit.
- Never paint any part of the unit or alter its surface in any way.
- Do not charge with any other wireless charger than the one provided by the manufacturer.

11.2 Maintenance and Repair

The unit requires minimal maintenance thanks to its design with no moving parts.

- Transducers must be kept clean and aligned.
- Impacts or incorrect handling may cause transducer misalignment.
- Wipe clean with a damp cloth, avoiding the transducer area.

11.3 Warranty

This Warranty covers defects from defective parts, materials, and manufacturing if reported within 3 years of purchase date.

Warranty is void in case of non-following the instructions of use, repair or maintenance without written authorisation:

- Any harm caused to device by accident will not be covered by the warranty.
- Using assembly elements different from those delivered with the product will void the warranty.
- Do not attempt to access the transducers area with your fingers.
- Do not attempt any modification to the unit.
- Never paint any part of the unit or alter its surface in any way.
- Do not charge with any other wireless charger than the one provided by the manufacturer.

For further information please contact Calypso Technical Support through sales@calypsoinstruments.com or visit www.ballisticswindmeters.com.